SENTINEL A60 AIR

Auto-Darkening Welding Helmet for PAPR Systems

Sentinel A60 Air

The Sentinel A60 Air welding helmet builds on the advancements of the standard Sentinel A60, taking your welding to the next level. A large panoramic view and perfect 1/1/1/1 EN optical clarity provide an even wider view of the weld pool without any distortion.

The reengineered auto-darkening filter (ADF) features new OpTCS™ broad-spectrum light control technology from ESAB, giving you an enhanced True Colour view with reduced eye fatigue for the most demanding days on the job. New 0.5 increment shade adjustments give you more precise control of your view.

The shell retains the signature Sentinel design, and incorporates a new air diffusor screen. A fully-adjustable Halo™ headgear, and external grind mode button complete the most comfortable, highest performance helmet ESAB has ever produced.

Welding Processes

- Oxy Fuel Cutting
- Plasma Cutting
- Grinding
- Welding, GMAW (MIG/MAG)
- Welding, GTAW (TIG)
- Welding, PAW -Plasma Arc Welding
- Welding, SMAW/MMA (Stick)

- ADF viewing area: 118 x 71 mm (4.65 x 2.80 in.) and intuitive internal ADF controls including sensitivity and delay
- Shade range: DIN 3 / 5–13, adjustable in 0.5 increments and ADF shade lock setting
- ESAB OpTCS True Colour Lens Technology
- On-board memory for up to 9 settings
- Arc sensors: 4
- Fast switching time of 0.08 milliseconds
- Replaceable CR2450 battery
- Low battery, grind mode and shade lock LEDs

Visit **esab.com** for more information.

Advanced CE 1/1/1/1 ADF technology with a simple interface and clear graphic display.

Compact shell with optional amber-coloured protective outer lens.

SENTINEL A60 AIR

Specifications	
Viewing Area	118 x 71 mm
Active Lens Shade	5–13 (Adjustable in 0.5 shade increments)
Passive Lens Shade	3
Power Supply	2 CR2450 batteries, replaceable
Arc Sensors	4
Switch Time (Light to Dark)	1/25,000 second
Switch Time (Dark to Light)	Digitally adjustable from 0.1 to 0.9 second
CE Optical Classification	1/1/1/1
Standards and Certifications*	CE: EN175; EN379; EN166 | ANSI: Z87.1 | CSA: Z94.3 | AS/NZS 1338.1 | ISO 16321 +TIG | EN 12941 TH3 (with EPR-X1 PAPR)
Weight	860 g

** Certified only for use with EPR-X1 (0700000900) and ESAB PAPR (0700002300; 0700002301) PAPR systems .*

Ordering Information	
Description	**Part Number**
Sentinel A60 AIR Helmet	0700600861
EPR-X1 PAPR system	0700500900

Delivery includes: Full helmet assembly, 2 replacement inner lenses, 4 replacement outer lenses, carry bag, durag and safety manual.

Spare Parts		
1	Sentinel A60 Front Cover Lens – Clear	0700600880
1	Sentinel A60 Front Cover Lens – Amber	0700600881
1	Sentinel A60 Front Cover Lens - Clear HC*	0700600882
1	Sentinel A60 Front Cover Lens – Amber HC*	0700600883
2	Sentinel A60 Air Helmet Shell	0700600864
3	CR2450 Coin Batteries (2)	Available separately
4	Sentinel A60 Auto Darkening Filter ADF (excl. batteries)	0700600865
5	Sentinel A60 Inside Cover Lens	0700600866
6	Magnifier Lens Frame	Provided with each magnifier lens
7	Sentinel A60 Air Halo Headgear	0700600868
8	Sentinel A60 Face Seal	0700600870
	Sentinel A60 Front Sweat Band	0700600869
	Sentinel A60 Magnifying Lens +1.0 diopter **	0700600872
	Sentinel A60 Magnifying Lens +1.5 diopter **	0700600873
	Sentinel A60 Magnifying Lens +2.0 diopter **	0700600874
	Sentinel A60 Magnifying Lens +2.5 diopter **	0700600875
9	Sentinel A60 Air Mesh Air Diffusor	0700600876

** HC Lenses include an anti-scratch hard coat for longer life.*

*** Magnifying Lenses are optional accessories not included with the complete helmet. The magnifier bracket is included with these lenses.*

SENTINEL A60 AIR

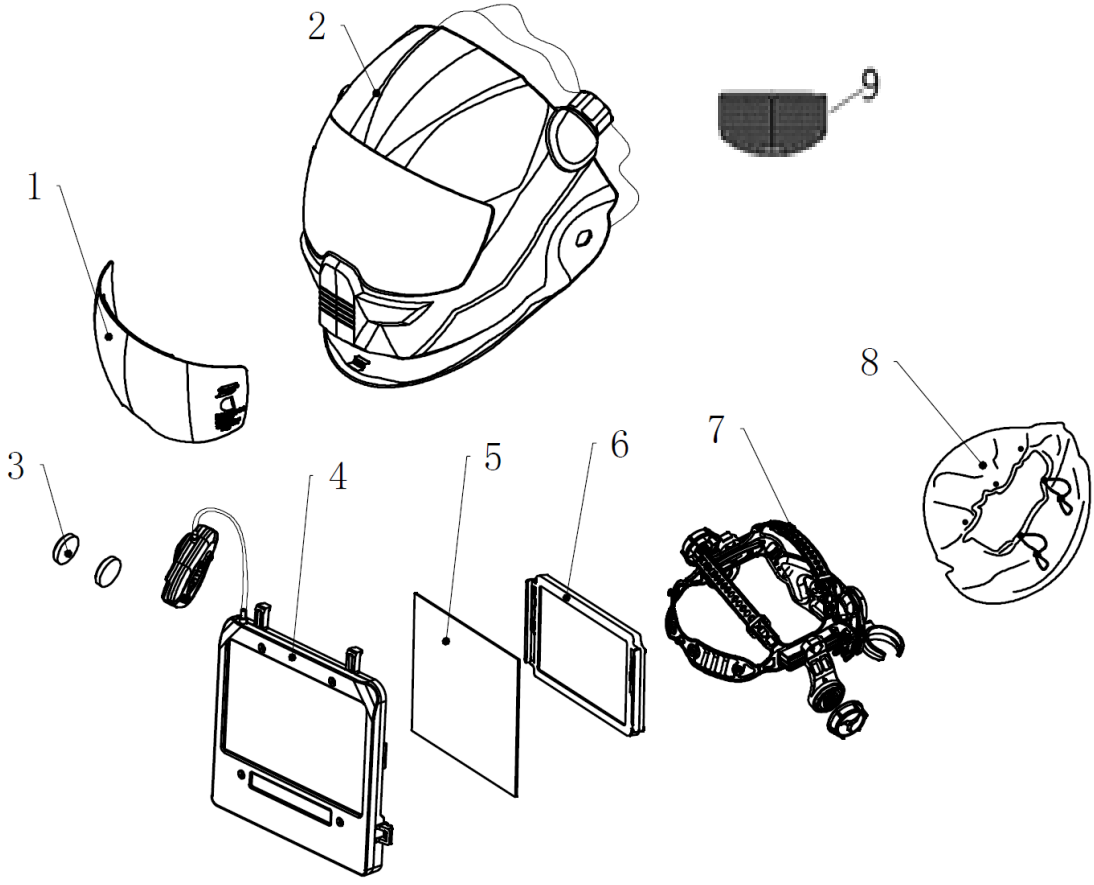

ESAB / esab.com

GLOBALLY CERTIFIED MANAGEMENT SYSTEMS

XA00267520 GL/EN 03/2023 ESAB reserves the right to alter product images and specifications without prior notice. Product images may not be an exact representation.

EPR-X1

Powered Air Purifying Respirator

ESAB's EPR-X1 PAPR unit connects seamlessly with all current ESAB prepared for air welding helmets and provides advanced respiratory protection from harmful welding fume particulates.

This PAPR is designed for applications ranging from occasional use to full-time industrial applications. The EPR-X1 offers a robust, compact housing with a powerful blower to ensure maximum life and performance. Check your battery status, fan settings and filter conditions at a glance with quick-access status LED lights. Additionally, the PAPR provides audible and vibratory alerts to notify the user of low air flow (indicating a needed filter change) and low battery conditions.

The EPR-X1's turbo unit is controlled with easily-accessed push buttons allowing three airflow speed ranges of 170/190/220 l/minute. The HEPA-quality, EN12941 TH-3P certified two-stage filter and spark arrestor are easily accessed through a removable front door.

Industry

- Agricultural Equipment
- Automotive
- General Manufacturing
- Heavy Fabrication
- Industrial and General Fabrication

- Compatible with all ESAB prepared for air helmets: Sentinel A-50; Savage A-40; G-30/40/50; F-20
- User adjustable air flow 170/190/220 l/min
- Li-Ion battery pack (up to 10h duration @ 170 l/min)
- P3 filter and pre-filter
- International intelligent charger (interchangeable pins)
- Audio/visual/vibration blocked filter and low battery alarm

Visit **esab.com** for more information.

EPR-X1 PAPR System

EPR-X1 with Savage A-40 Air Helmet

EPR-X1

Specifications	
Air Flow	Selectable 170; 190; 210 l/min (6 - 7.8 cfm)
Battery Time	Up to 10h @ 170 l/min (7.8 cfm)
Filter	P3 filter and pre-filter with replaceable spark arrestor
Certifications	CE EN12941 TH3 P
Dimensions LxHxW	210 x 169 x 78 mm (8.3 x 6.7 x 3.1 in.)
Weight	1 kg (2.2 lbs)

Ordering Information	
EPR-X1 PAPR system with expandable hose	0700500900

For more information on helmets please see separate fact sheets or manuals.

Wear and Spare Parts		
1	EPR-X1 PAPR Blower Unit	0700500901
2	EPR-X1 PAPR Prefilter	0700500902
3	EPR-X1 PAPR P3 Filter	0700500903
4	EPR-X1 PAPR Battery	0700500904
5	EPR-X1 PAPR Filter Cover	0700500905
6	EPR-X1 PAPR Spark Arrestor	0700500906
7	ESAB Breathing Tube for EPR-X1pen PAPR	0700500907
8	Anti-fire Cloth of Breathing Tube for EPR-X1pen PAPR	0700500908
9	Waist Belt and Shoulder Harness	0700500909
10	Universal Battery Charger	0700500910

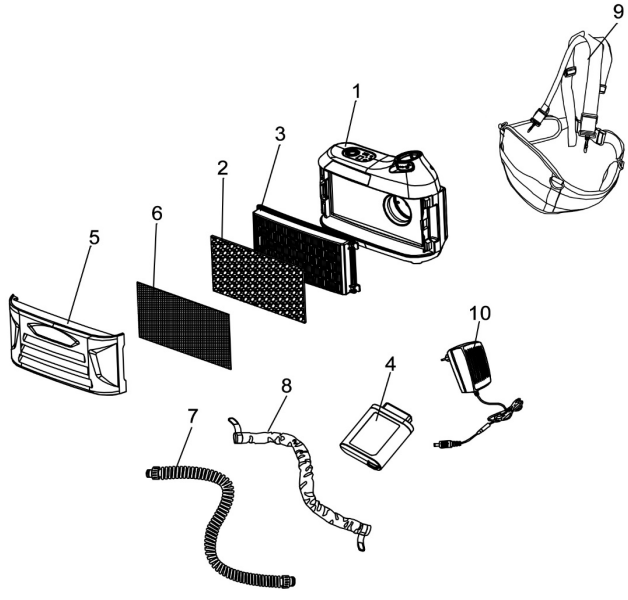

ESAB / esab.com

GLOBALLY CERTIFIED MANAGEMENT SYSTEMS

XA00244820 Rev1 05/2022 ESAB reserves the right to alter specifications without prior notice.